WALL MOUNT

DATASHEET

SUPERIOR ELECTRONICS

32-75 EXTRA SLIM FULL MOTION TV CEILING-MOUNT

CODE	SUPSTV024
BARCODE	8054242080971
MODEL	Ceiling TV Mount
TV SIZE	32"- 75"
TILT RANGE	+0° ~ -25°
SWIVEL RANGE	+180° ~ -180°
LEVEL ADJUSTMENT	+3° ~ -3°
MATERIAL	Steel
WEIGHT CAPACITY	60 kg / 132 lbs
OUTER CARTON	3 pz
VESA COMPATIBLE	200×200, 300×200, 400×200, 300×300, 400×300, 400×400
DISTANCE FROM THE CEILING	485~925 mm
ADDITIONAL CONTENT	Cable-management system, direction indicators, instruction manual, 2-year warranty

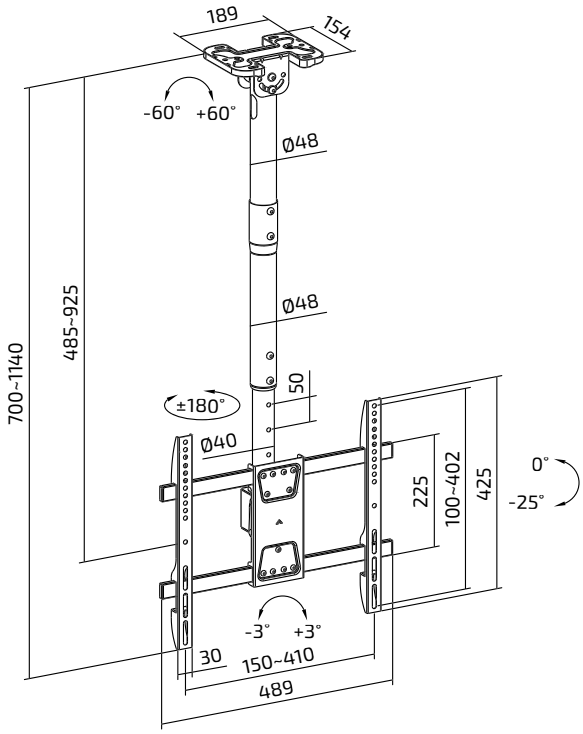

SUPERIOR-ELECTRONICS.COM

Superior Electronics
Largo Lanciani, 24 - 00162 Roma

All mentioned product names, logos and brands are property of their respective owners